3-IN-1

200A MULTI PROCESS WELDER

GB

00588 – MPW200 SPARE PARTS DRAWING

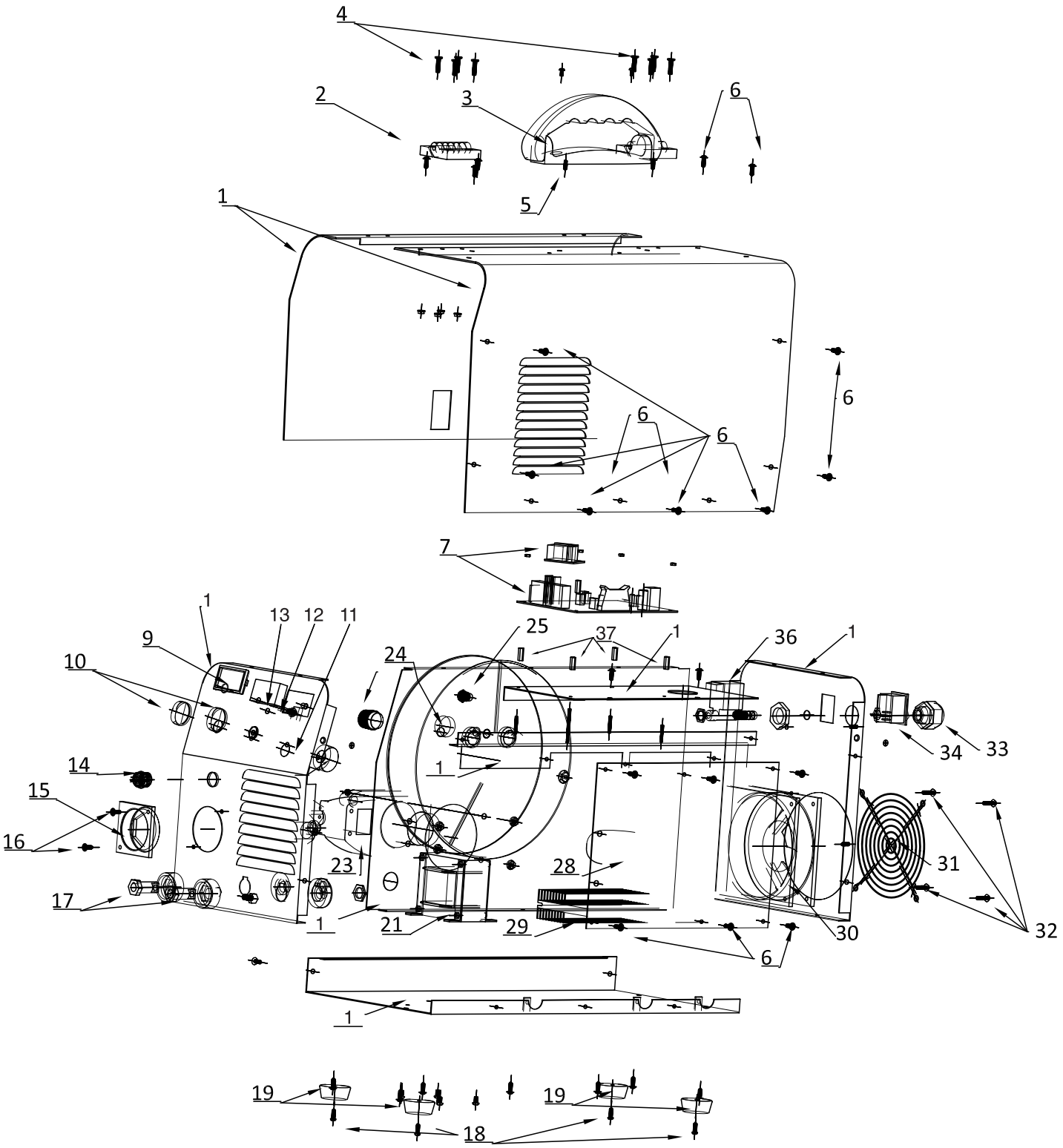

3-IN-1

200A MULTI PROCESS WELDER

GB

00588 – MPW200 SPARE PARTS LISTING

KEY No.	PART No.	STOCK No.	DESCRIPTION
1	Y-MPW200-01	804	Machine shell (complete)
2	Y-MPW200-02	805	Hinge
3	Y-MPW200-03	807	Handle
4	Y-MPW200-04	808	6x18 Countersunk screw
5	Y-MPW200-05	809	5x16 Screw
6	Y-MPW200-06	810	4x8 Screw
7	Y-MPW200-07	811	Control board
9	Y-MPW200-09	844	Screen
10	Y-MPW200-10	845	Knob
11	Y-MPW200-11	846	Potentiometer
12	Y-MPW200-12	847	Switch
13	Y-MPW200-13	849	Indicator light
14	Y-MPW200-14	850	Air socket set
15	Y-MPW200-15	851	Torch flange
16	Y-MPW200-16	852	4x12 Screw
17	Y-MPW200-17	853	Dinse 10-25 connect set
18	Y-MPW200-18	854	4x10 Screw
19	Y-MPW200-19	855	Feet
21	Y-MPW200-21	858	Reactor
23	Y-MPW200-23	860	Wire feeder
24	Y-MPW200-24	861	Terminal
25	Y-MPW200-25	862	Switch
28	Y-MPW200-28	863	PCB Board
29	Y-MPW200-29	865	Radiator set
30	Y-MPW200-30	866	Fan
31	Y-MPW200-31	874	Fan cover
32	Y-MPW200-32	913	5x12 Screw
33	Y-MPW200-33	914	Cable gland
34	Y-MPW200-34	919	Switch
36	Y-MPW200-36	922	Solenoid valve
37	Y-MPW200-37	3146	3x16+6 Hex bolt
	Y-MPW200-38	4607	MIG Torch
	Y-MPW200-39	4614	TIG Torch
	Y-MPW200-40	4620	Electrode holder
	Y-MPW200-41	4628	Earth clamp

KEY No.	PART No.	STOCK No.	DESCRIPTION